SELF HELP CHILLED MULTI DECK (REAR DOORS) - R290 WITH AIRFLOW KIT AF1 (IN/OUT TO CUSTOMER SIDE) - FITTING INSTRUCTIONS

cabinet kubus chilled by hydrocarbon

General Installation Considerations

1) Area in which display is to be sited must have a minimum room volume no less than 109 cu m (KMDR2HT), 122 cu m (KMDR3HT) or 132 cu m (KMDR4HT & KMDR5HT).
2) Install over a sealed floor or ventilated floor void.
3) Do not site the display within 2m of ceiling mounted air conditioning grilles.
4) Do not site the display beneath a high level of direct sunlight.
5) Display will operate in a 24 hour environment.
6) Access to maintain condensing unit should be made via removable fascia panels or doors to customer and operator side of counter.

A) WORKTOP CUT-OUT

Model Ref.	Worktop Cut Out Size (mm)		Model Weight
	Length	Width	(in Kg)
KMDR2HT + AF1	795	650	155
KMDR3HT + AF1	1145	650	175
KMDR4HT + AF1	1495	650	217
KMDR5HT + AF1	1845	650	245

FIX LIFTING BRACKETS TO FRAME END FLANGES USING SCREWS ALREADY IN FLANGES, THEN LOCATE LIFTING BARS INTO SQUARE HOLES.

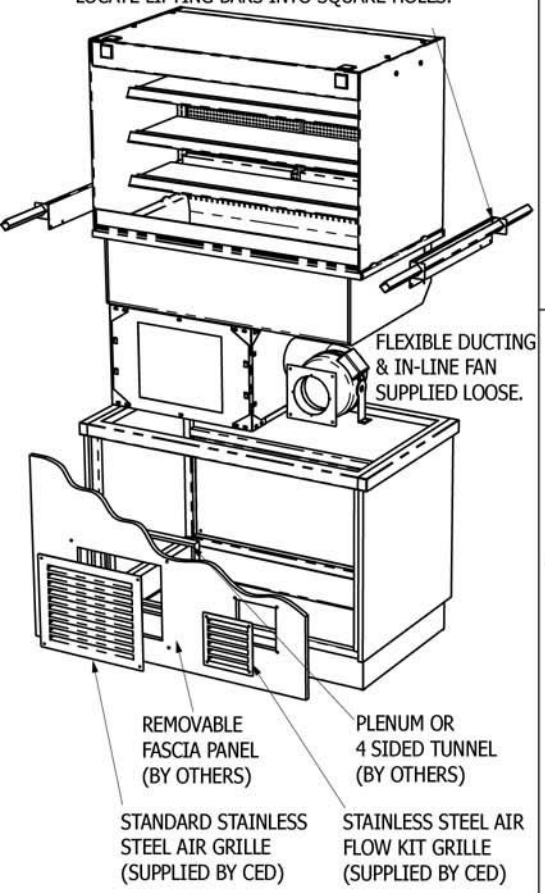

FRONT ISOMETRIC
(CUSTOMER SIDE)

B) AIR INTAKE & OUTLET CUT-OUTS

(CUSTOMER SIDE FASCIA PANEL)

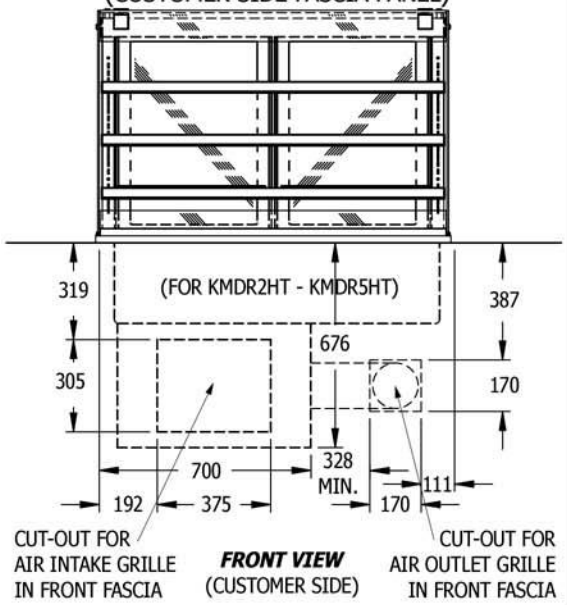

FRONT VIEW
(CUSTOMER SIDE)

C) FITTING INTO COUNTER WORKTOP

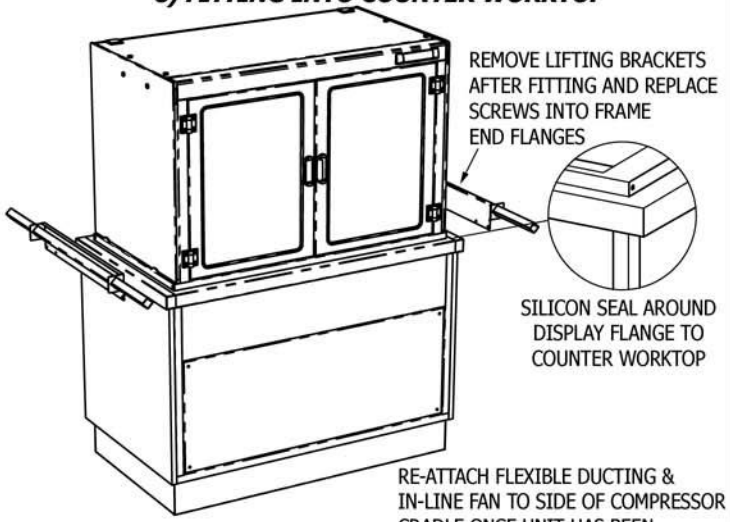

RE-ATTACH FLEXIBLE DUCTING & IN-LINE FAN TO SIDE OF COMPRESSOR CRADLE ONCE UNIT HAS BEEN DROPPED INTO PLACE. ELECTRICALY CONNECT FAN TO CONTROL BOX WITH "KETTLE PLUG"

REAR ISOMETRIC
(OPERATOR SIDE)

D) FITTING SHELVES

LOCATE SHELF SUPPORT BRACKETS INTO REAR SLOTS AT HEIGHT & ANGLE TO SUIT PRODUCTS (NOTE: 2 No. BRACKETS WITH GLASS STOPS TO BE FITTED AT BTM.). PUSH ON 3 x GREY SILICON SHELF RESTS ONTO EACH BRACKET BEFORE GLASS SHELVES ARE LOWERED ON (NOTE: 1 No. SHORT SHELF TO BE FITTED AT BTM.)

E) AIR INTAKE TUNNEL / PLENUM FITTING

(CUSTOMER SIDE FASCIA PANEL)

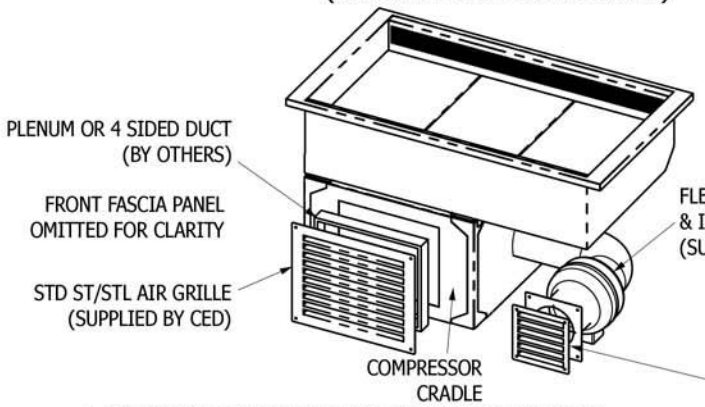

FRONT ISOMETRIC
(CUSTOMER SIDE)

A PLENUM OR 4 SIDED TUNNEL (MADE FROM MDF, PLYWOOD OR NILFLAM TYPE MATERIAL) MUST BE FITTED BETWEEN THE REAR FACE OF THE CUSTOMER SIDE FASCIA PANEL AND THE FRONT FACE OF THE COMPRESSOR CRADLE, AROUND THE AIR INTAKE CUT-OUT, TO STOP THE RE-CIRCULATION OF HOT AIR FROM THE COMPRESSOR. SILICON SEAL AROUND EDGES TO ENSURE THERE ARE NO AIR GAPS.

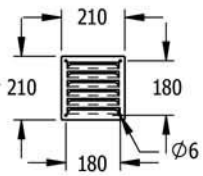

STAINLESS STEEL AIR FLOW KIT LOUVRE GRILLE (1 SUPPLIED WITH KIT)

F) FITTING OF LOUVRE GRILLES

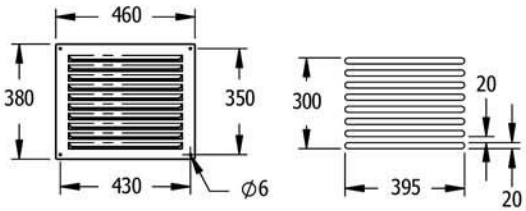

STANDARD STAINLESS STEEL FASCIA LOUVRE (1 SUPPLIED WITH UNIT)

ALTERNATIVE FASCIA PANEL ROUTING

CED
CATERING EQUIPMENT DESIGN

Tel. 01254 238 282 Fax. 01254 238 228
e-mail: aftersales@cedlimited.com