NOTE:-
THE FROST TOP IS PRE FACTORY SET TO ACHIEVE TEMPERATURES BETWEEN -8 TO -10°C WHICH IS THE OPTIMUM TEMPERATURE FOR PRODUCING FROST ON THE WORKTOP.
PLEASE CHECK WITH WORKTOP MANUFACTURER THAT THE MATERIAL IS ABLE TO PERFORM WITH IN THIS TEMPERATURE RANGE.

# INSTALLATION NOTES :

- TEMPERATURE TRANSFER COMPOUND ( SUPPLIED BY
- CED ) TO BE APPLIED EVENLY IN BETWEEN SOLID
- SURFACE AND FROST TOP.
  ( !!! SILICONE NOT TO BE USED !!! )
- ADEQUATE DUCTING REQUIRED FOR
  CORRECT AIR CIRCULATION ( BY OTHERS ).
- ELECTRICAL LOAD 3.0Kw 13Amp.
- UNIT SUPPLIED WITH 13A PLUG AND TWO
  METERS LONG CABLE.
- GAS CHARGE 0.17 KG ( R290 ).

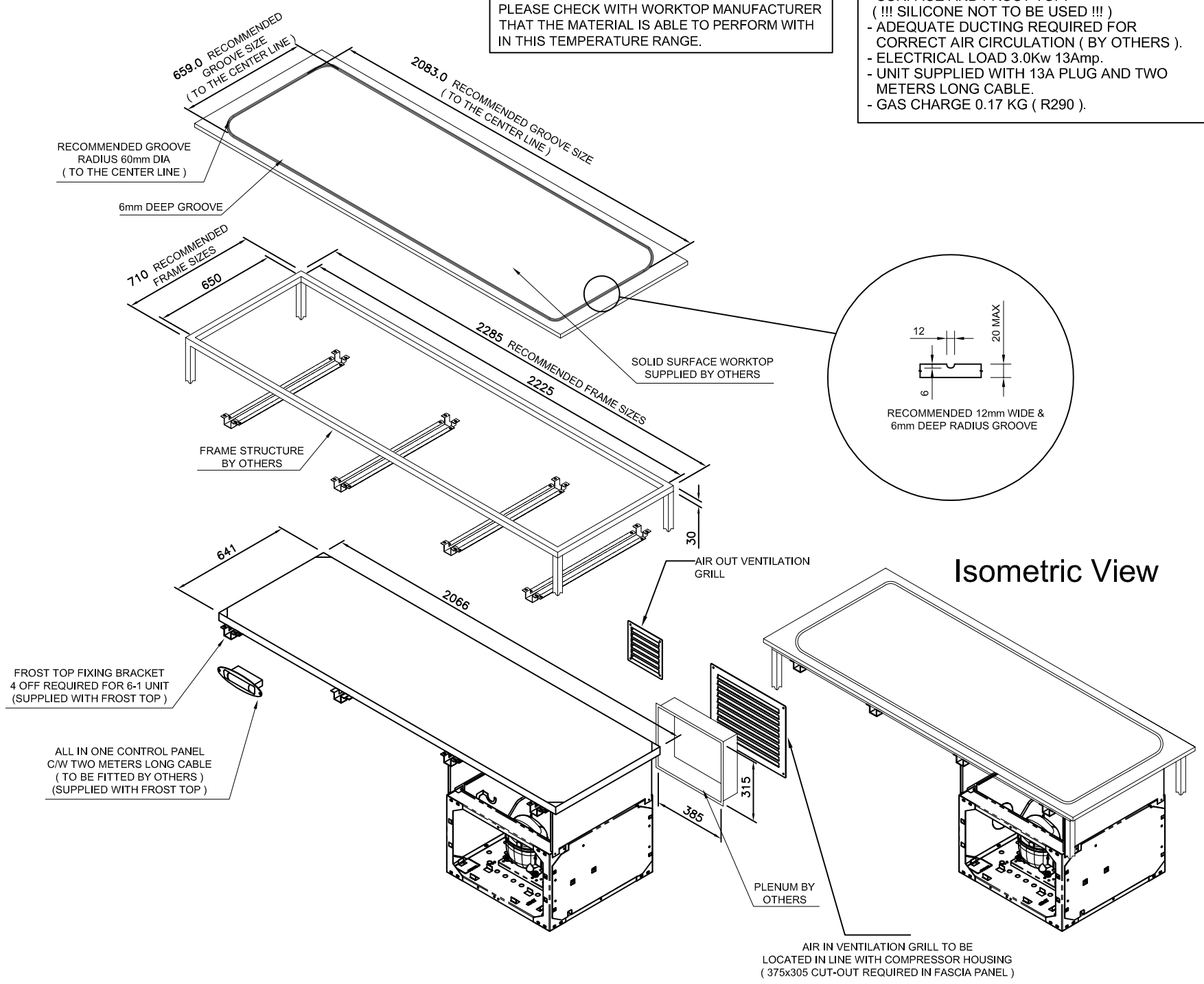


## Isometric View

ALTERNATE FASCIA PANEL ROUTING

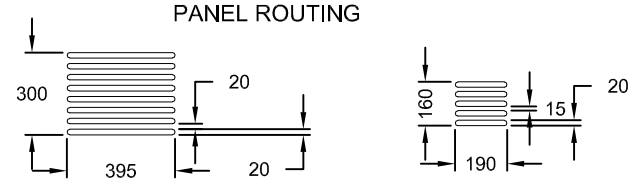


ST/STEEL VENT GRILL ( 1 SUPPLIED WITH FROST TOP )

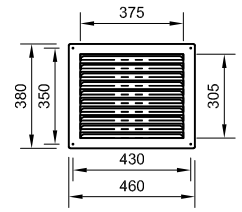


ST/STEEL VENT GRILL AIR-OUT ( 1 SUPPLIED WITH FROST TOP )

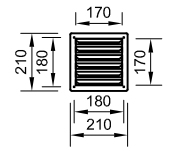


# 6-1 Frost Top + AF1 KIT

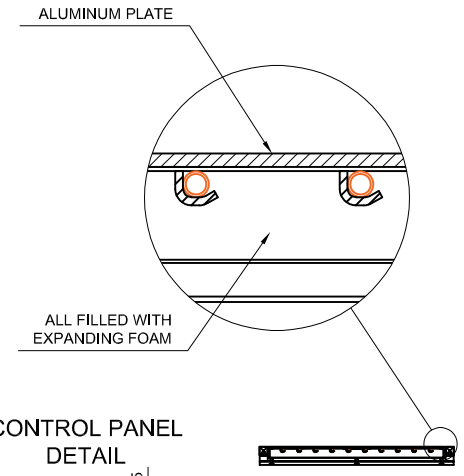


CUSTOMERS SIDE

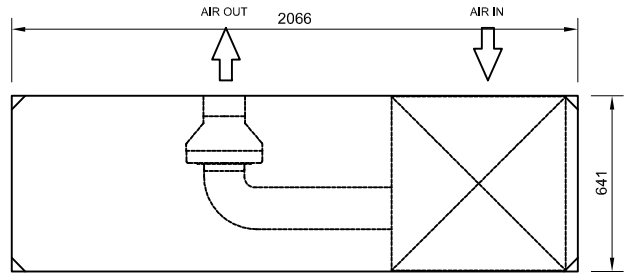


OPERATORS SIDE

CONTROL PANEL DETAIL

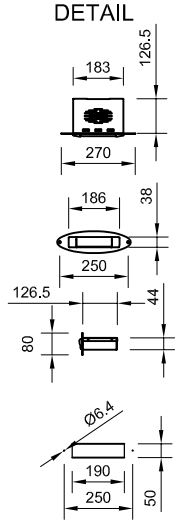


CONTROL PANEL CUT OUT

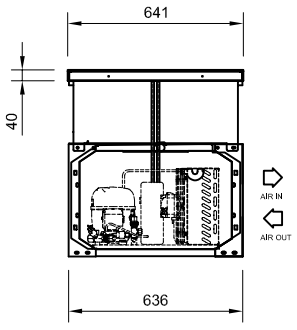


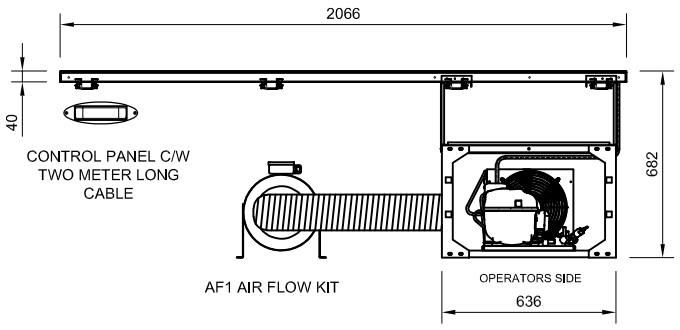


| DRAWING STATUS | AWAITING CLIENT APPROVAL |
|---|---|

| TOLERANCE TABLE | | Rev No | REVISION DETAILS | DATE |
|---|---|---|---|---|
| 1 | ± 2mm | | | |
| 1.0 | ± 0.5mm | – | – | – |
| SITE: | VIRGIN LOUNGE | – | – | – |
| CLIENT: | CATERING PROJECTS | TITLE: | 6-1 FROST TOP | REV No: |
| DRAWN BY: | IWS | ORDER No: | 9854 | DRG No: 236466 |
| SCALE: | 1:16 @ A2 | DATE: | 16/03/2020 | |