NOTE:-
THE FROST TOP IS PRE FACTORY SET TO ACHIEVE TEMPERATURES BETWEEN -8 TO -10°C WHICH IS THE OPTIMUM TEMPERATURE FOR PRODUCING FROST ON THE WORKTOP.
PLEASE CHECK WITH WORKTOP MANUFACTURER THAT THE MATERIAL IS ABLE TO PERFORM WITH IN THIS TEMPERATURE RANGE.

INSTALLATION NOTES :

- TEMPERATURE TRANSFER COMPOUND (SUPPLIED BY
- CED) TO BE APPLIED EVENLY IN BETWEEN SOLID
- SURFACE AND FROST TOP.
(!!! SILICONE NOT TO BE USED !!!)
- ADEQUATE DUCTING REQUIRED FOR CORRECT AIR CIRCULATION (BY OTHERS).
- ELECTRICAL LOAD 3.0Kw 13Amp.
- UNIT SUPPLIED WITH 13A PLUG AND TWO METERS LONG CABLE.
- GAS CHARGE 0.12 KG (R290).

ALTERNATE FASCIA PANEL ROUTING

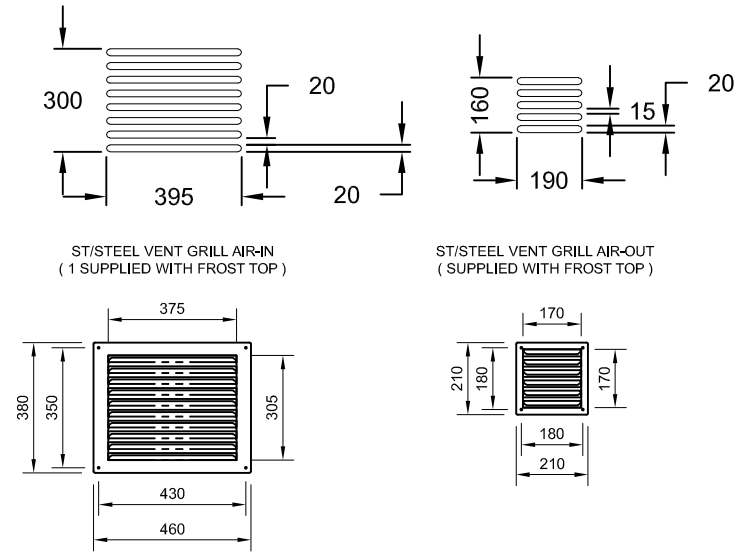

2-1 FROST TOP + AF2 KIT

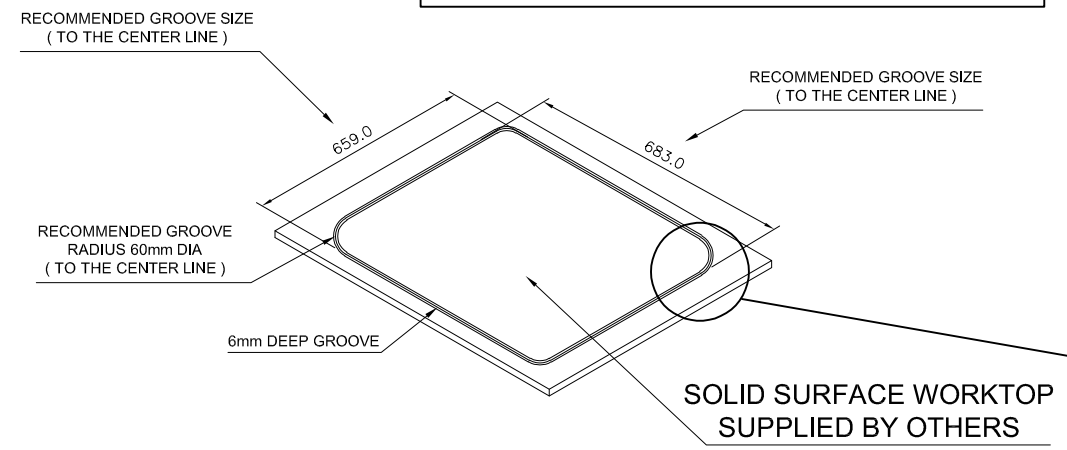

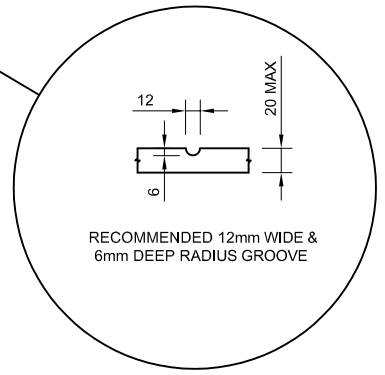

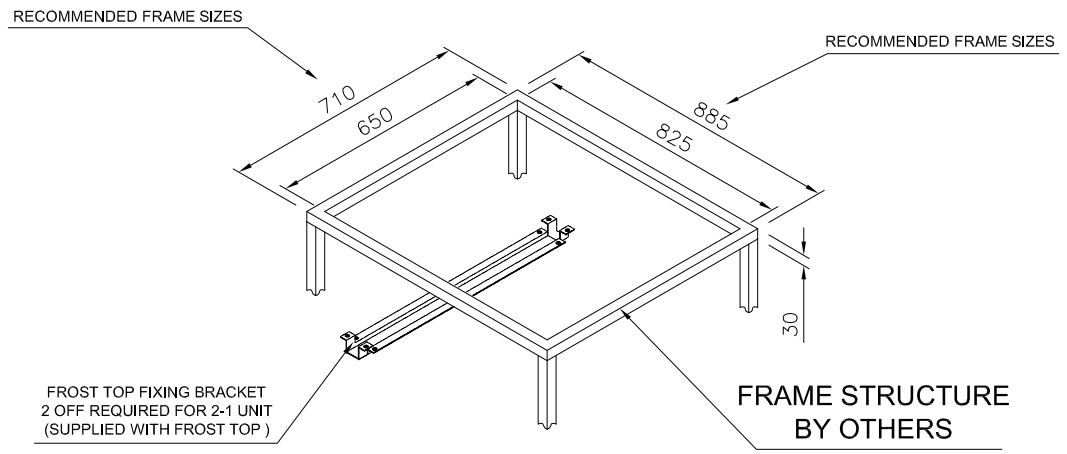

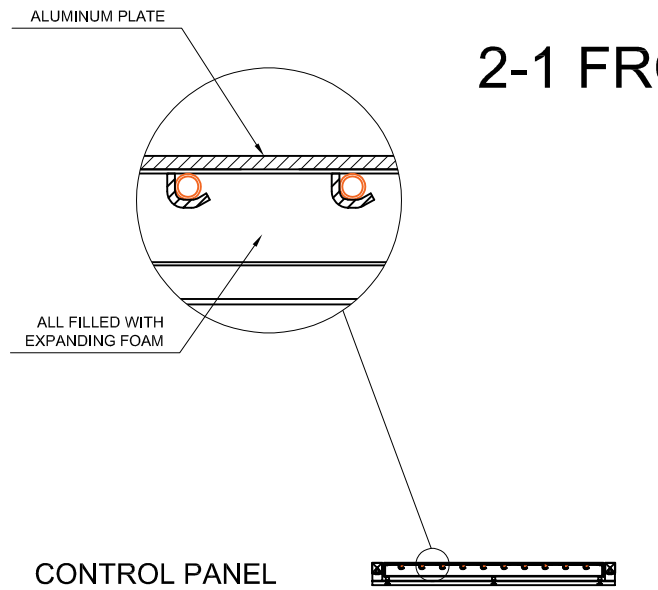

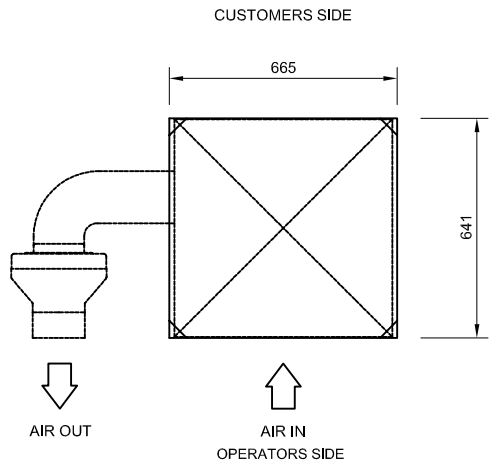

Isometric View

CONTROL PANEL DETAIL

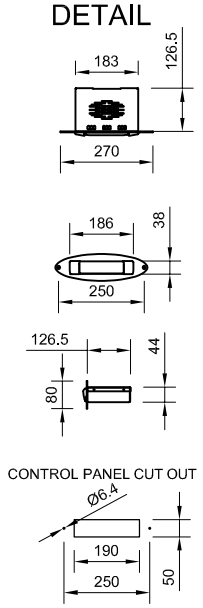

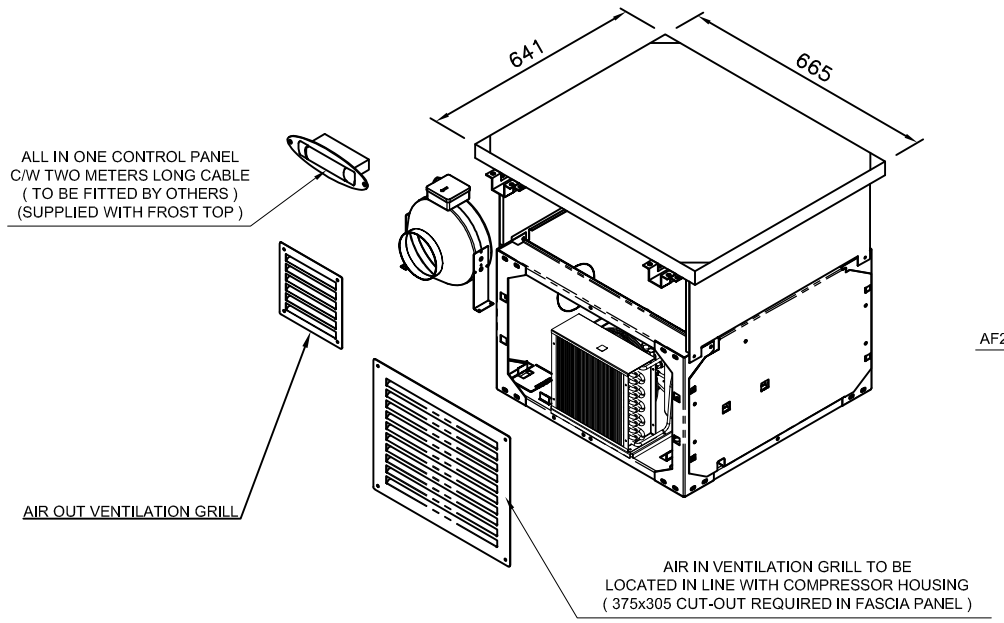

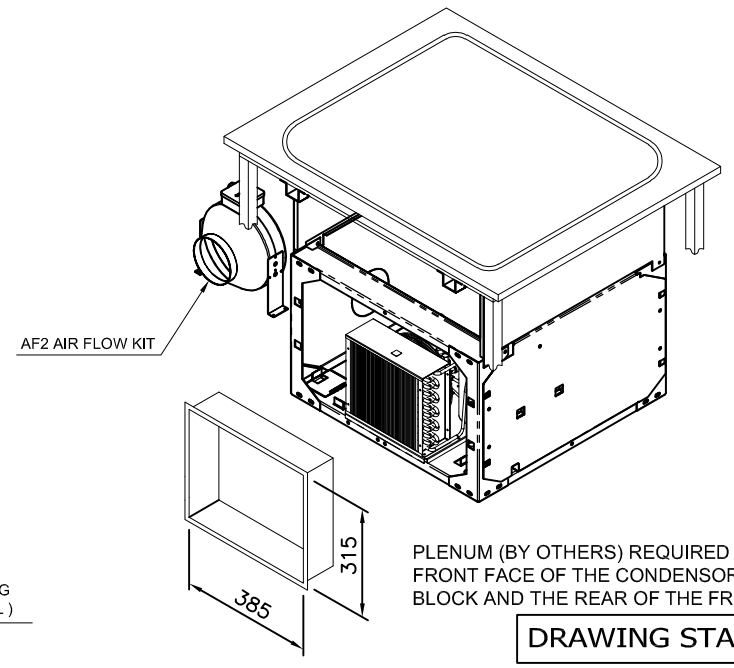

PLENUM (BY OTHERS) REQUIRED BETWEEN THE FRONT FACE OF THE CONDENSOR BLOCK AND THE REAR OF THE FRONT FASCIA

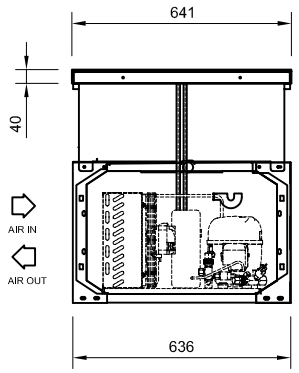

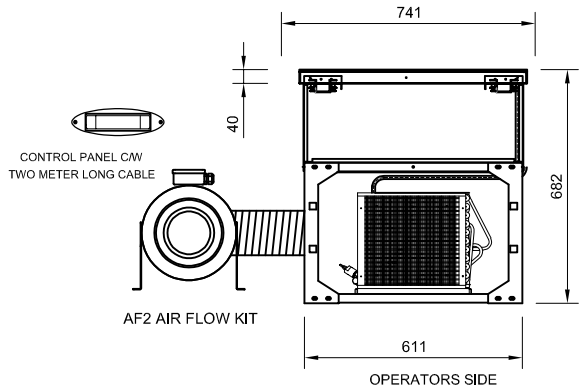

TOLERANCE TABLE		Rev No	REVISION DETAILS	DATE
1	± 2mm			
1.0	± 0.5mm	–	–	–
SITE:	-	–	–	–
CLIENT:	-	TITLE: ITEM 2.11 2-1 FROST TOP C/W AF2 AIR FLOW KIT		REV No:
DRAWN BY:	MG	ORDER No:	-	DRG No: -
SCALE:	1:16 @ A2	DATE:	19/06/2018	

DRAWING STATUS	AWAITING CLIENT APPROVAL